ELECTRON BEAM SOURCE

MODEL STIH-270-2

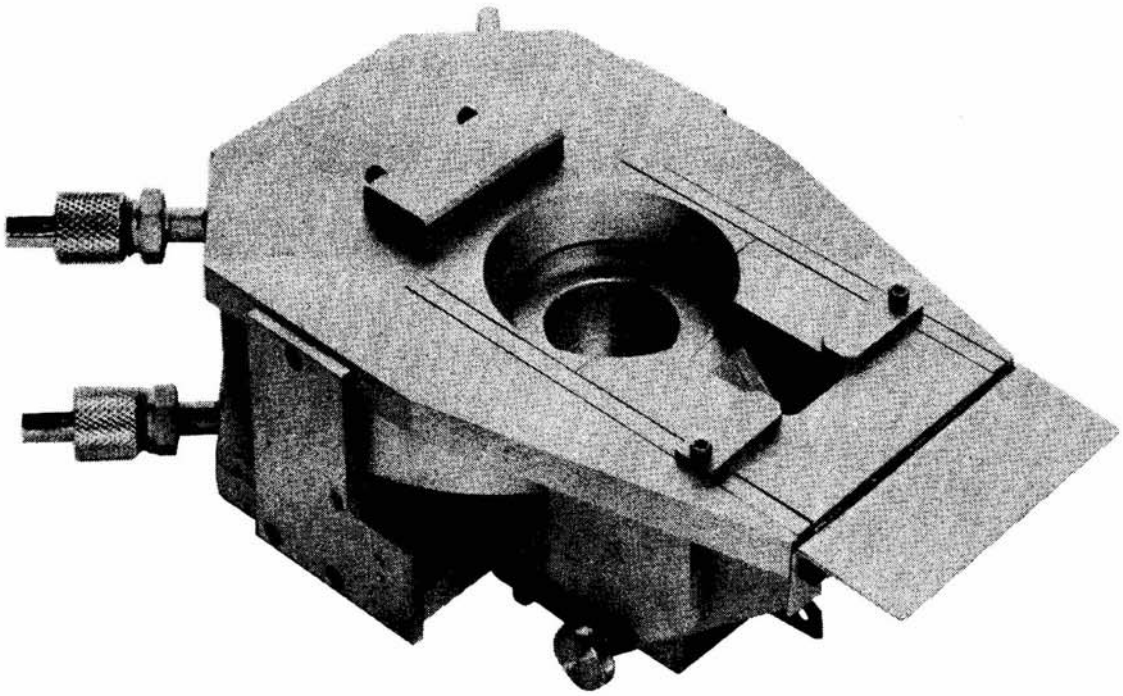

DANGER HIGH VOLTAGE

THIS SOURCE IS ORDINARILY CONNECTED TO A POWER SUPPLY OPERATING AT 10,000 VOLTS. CONTACT WITH THIS VOLTAGE CAN BE FATAL. REFER TO POWER SUPPLY INSTRUCTIONS FOR PRECAUTIONS. BEFORE WORKING IN HIGH VOLTAGE AREAS, MAKE SURE THAT THE POWER SUPPLY SWITCHES ARE TURNED OFF AND GROUNDING HOOKS ARE IN PLACE.

CAUTION

TO AVOID DAMAGING THE CRUCIBLE WHEN OPERATING THIS SOURCE, BE CERTAIN THAT COOLING WATER IS FLOWING THROUGH THE CRUCIBLE, THE CRUCIBLE IS AT LEAST HALF FULL OF EVAPORANT MATERIAL, AND THE BEAM SPOT IS CENTERED IN THE CRUCIBLE.

This Electron Beam Source is covered by one or more of the following U.S. patents: 3,177,535; 3,235,647; 3,483,417. Other patents pending.

LIST OF ILLUSTRATIONS

FIGURE	TITLE	PAGE
1	Beam Spot Size and Shape	2
2	Shunt Bar and Source Dimensions	2
3	Shielding for High Voltage Leads (Typical)	4
4	Normal Pool Height	5
5	Approximate Aluminum Deposition Rates at 10″ With and Without Pole Extensions	6
6	Emitter Assembly, Exploded View	8
7	Filament Alignment	8
8	Source Assembly, Exploded View	10

TABLE OF CONTENTS

SECTION	TITLE	PAGE
1.0	**SPECIFICATIONS**	**1**
1.1	Introduction	1
1.2	Specifications	1
2.0	**THEORY OF OPERATION**	**3**
3.0	**INSTALLATION**	**3**
3.1	Mechanical	3
3.2	Electrical Connections	4
4.0	**OPERATION**	**5**
4.1	Startup	5
4.2	Normal Operation	5
5.0	**MAINTENANCE**	**7**
5.1	Periodic Maintenance	7
5.2	Continual Maintenance	7
5.3	Troubleshooting	9
6.0	**PARTS LIST**	**11**

DANGER HIGH VOLTAGE

THIS SOURCE IS ORDINARILY CONNECTED TO A POWER SUPPLY OPERATING AT 10,000 VOLTS. CONTACT WITH THIS VOLTAGE CAN BE FATAL. REFER TO POWER SUPPLY INSTRUCTIONS FOR PRECAUTIONS. BEFORE WORKING IN HIGH VOLTAGE AREAS, MAKE SURE THAT THE POWER SUPPLY SWITCHES ARE TURNED OFF AND GROUNDING HOOKS ARE IN PLACE.

CAUTION

TO AVOID DAMAGING THE CRUCIBLE WHEN OPERATING THIS SOURCE, BE CERTAIN THAT COOLING WATER IS FLOWING THROUGH THE CRUCIBLE, THE CRUCIBLE IS AT LEAST HALF FULL OF EVAPORANT MATERIAL, AND THE BEAM SPOT IS CENTERED IN THE CRUCIBLE.

This Electron Beam Source is covered by one or more of the following U.S. patents: 3,177,535; 3,235,647; 3,483,417. Other patents pending.

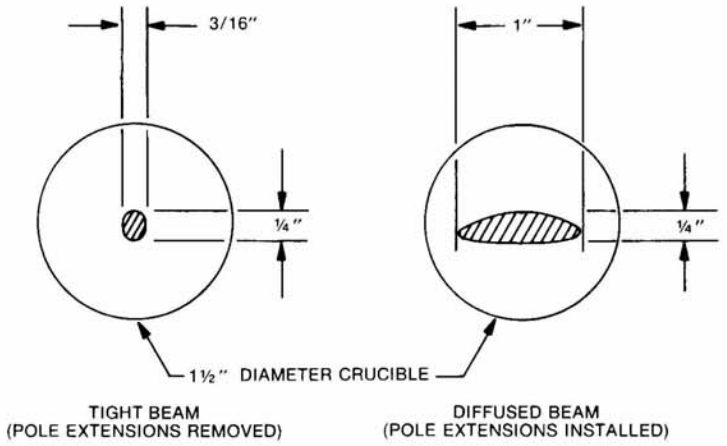

FIGURE 1
BEAM SPOT SIZE AND SHAPE

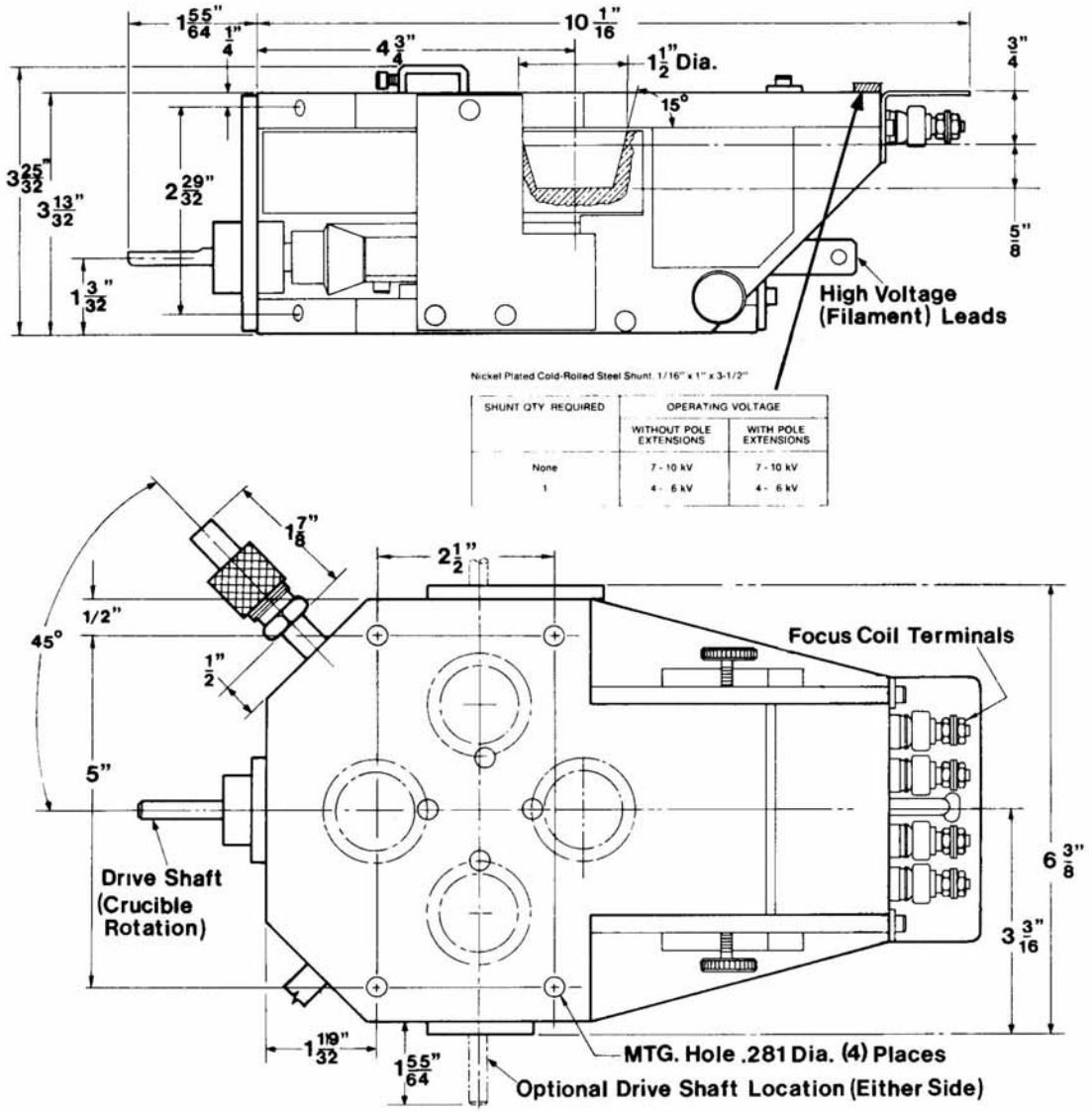

SHUNT QTY REQUIRED	OPERATING VOLTAGE	
	WITHOUT POLE EXTENSIONS	WITH POLE EXTENSIONS
None	7 - 10 kV	7 - 10 kV
1	4 - 6 kV	4 - 6 kV

FIGURE 2
SHUNT BAR AND SOURCE DIMENSIONS

SECTION 1

SPECIFICATIONS

1.1 INTRODUCTION

The AIRCO Temescal Model STIH-270-2 Electron Beam Source is a high power, heavy duty source designed for production applications.

The Model STIH-270-2 Electron Beam Source has the following features:

1. Four large (15 cc) water-cooled copper crucibles allow longer, uninterrupted runs.
2. The Source has a hidden, easily removable, plug-in type emitter assembly with 270° beam deflection.
3. A main field permanent magnet ensures that the beam is always impinging on the hearth area, preventing beam damage if the electromagnet fails.
4. A hermetically sealed deflection electromagnet gives full X and Y beam sweep with high frequency capability.
5. Beam spot size adjustment for optimum beam density is accomplished by adding or removing the flush mounted pole extensions.
6. The Source is bakeable to 250°C. Standard water fittings are bakeable to 150°C.
7. The Source design eliminates the need for a secondary electron overspray shield.
8. A crucible position indicator is available as an option.

1.2 SPECIFICATIONS

A. EVAPORATION RATE	Up to 25,000 Å/min. of aluminum at 10 kW and at 10″ source-to-substrate distance.
B. SOURCE POWER	10 kW maximum (10,000 volts at 1.0 amps)
C. FILAMENT POWER	50 amps maximum, 6 VAC maximum
D. DEFLECTION ELECTROMAGNET POWER	
Longitudinal Sweep	0-2.7 amps, coil resistance (2.6-2.8 Ohm)
Lateral Sweep	0-2 amps, coil resistance (3.0-3.2 Ohm)
E. PERMANENT MAGNET	Main field
F. CRUCIBLE SIZE	Conical with flat bottom: 1½″ dia. top x 1¼″ dia. bottom x 1-1/16″ deep; 15 cc capacity ea. (4) pocket, 60 cc total capacity
G. COOLING WATER	
Flow	4 gal./min. minimum
Pressure	100 psig maximum
Pressure Differential	40 psig minimum
Temperature	60° F or less
H. BEAM SPOT SIZE (See Figure 1)	
Tight Beam	Approximately ¼″ dia.
Diffuse Beam	Approximately ¼″ wide x 1″ long, cigar shape
I. SOURCE DIMENSIONS (See Figure 2)	3.781″ H x 6.375″ W x 10.062″ D (excluding water lines)
J. SOURCE WEIGHT	26 pounds

SECTION 2

THEORY OF OPERATION

An electron beam is a stream of energetic charged particles which flows from a cathode emitter and is typically accelerated by a high voltage dc power supply. The kinetic energy of this stream of charged particles becomes random energy (heat) when the electrons strike a surface. This energy, which is dissipated into the surface, can melt and evaporate any known material.

AIRCO Temescal electron beam sources operate on principles similar to a cathode-ray tube. The cathode (tungsten filament) is operated at a negative high voltage potential, and the electrons are accelerated in the form of a beam into the crucible which is at ground potential. The filament is secured in a cavity with an opening at the front, bounded by blocks and a beam former, all at cathode potential. The filament is heated to incandescence, causing electrons to be emitted in random directions. Since the cavity in which the filament is mounted is open at the front, only those electrons emitted in that direction escape. These electrons are accelerated by an anode potential. During this acceleration they are electrostatically focused into a beam form, the anode operating similarly to a single aperture lens. After the electron beam passes the anode, it is both deflected and further focused by a transverse magnetic field through a beam passage opening in the hearth onto the evaporant material in the crucible. When the electron beam contacts the evaporant material, melting and evaporation occurs.

SECTION 3

INSTALLATION

3.1 MECHANICAL

3.1.1 Required Components

To mount the Source in a chamber, the following components are necessary.

QTY.	DESCRIPTION	AIRCO Temescal Part Number
2	High Voltage Feedthrough	0302-2573-0 (Metal Seal) 0718-8483-0 (O-ring Seal)
1	Focus Coil Feedthrough	0502-0093-0 (Metal Seal) 0402-7463-0 (O-ring Seal)
1	Water Feedthrough	0302-6022-0 (Metal Seal) 0718-9193-0 (O-ring Seal)
1	BR-2B Rotary Feedthrough	0918-6483-0 (¼″ Bolt)
1	Water Flow Switch	9102-0001-0
1	Water Line	⅜″ O.D. Copper Tubing

3.1.2 Installation

1. Bolt the Source securely to the chamber baseplate to ensure good ground contact.

2. Using ⅜″ O.D. copper tubing, connect the Source water line to the water feedthrough. On the outside water lines, connect the water flow switch to the water "out" line of the Source.

3. The shape of the electron beam path requires that the shutter be no less than 4″ above the Source. A greater distance is desirable and will result in less heating and slower buildup on the shutter.

3.2 ELECTRICAL CONNECTIONS

3.2.1 Installation in Vacuum

Electrical conductor sizes are based on a current density of 1000 amps/sq. in. in vacuum. To minimize coating buildup which can cause unnecessary arcing, keep all leads as short and as low as possible.

All electrical leads and feedthroughs should be shielded from line-of-sight deposition. Adequate shielding will be optically dense from the leads or feedthroughs to the substrate. Refer to Figure 3.

A. HIGH VOLTAGE LEADS (2 required)

Use #6 AWG flexible bare-wire leads which are supplied with the Source, or alternatively, use 1/16″ x ½″ copper strap. The leads are to be spaced a minimum of ⅜″ from any ground potential and from each other.

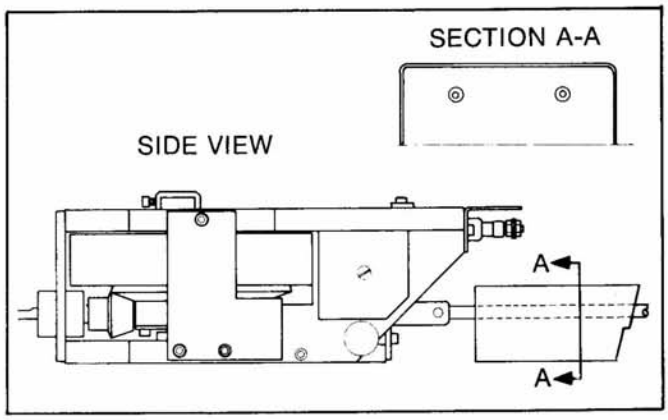

FIGURE 3
SHIELDING FOR HIGH VOLTAGE LEADS (TYPICAL)

B. COIL LEADS (2 required for longitudinal positioning, and 2 additional leads required for lateral sweep controls)

For both coil lead connections, use #16 AWG wire.

NOTE: Polarity (+ and −) of longitudinal coil leads is marked on the coil shield. Make sure that proper connection is made to the power supply. A reversed polarity will cause the beam to reverse and possibly damage the Source.

3.2.2 Installation in Atmosphere

IMPORTANT

CONSULT THE POWER SUPPLY INSTRUCTION MANUAL FOR A DESCRIPTION OF THE REQUIRED CONNECTIONS.

A. HIGH VOLTAGE LEADS (2 required)

Use #6 AWG stranded copper wire (10 kV insulation). Space the leads a minimum of 1½″ from any ground potential.

B. COIL LEADS (2 required for longitudinal positioning, and 2 additional leads required for lateral sweep controls)

Use #16 AWG wire.

C. WATER FLOW SWITCH LEAD

Use #16 AWG wire.

3.2.3 Grounding

The Source and power supply must be joined to a good common earth ground. The crucible must be grounded to the power supply through the mounting plate, chamber, and low impedance ground strap. REFER TO THE POWER SUPPLY INSTRUCTION MANUAL FOR A DESCRIPTION OF THE REQUIRED EARTH GROUND. Sizing on the basis of dc current alone will probably be inadequate. This is, basically, an RF ground designed to minimize RF effects at the power supply due to arcs at the Source.

SECTION 4

OPERATION

4.1 STARTUP

4.1.1 Mechanical Inspection

1. Check the gun water interlock to ensure that cooling water is flowing through the crucible. The cooling water should be flowing at a constant rate of at least 4 gal./min., and must be flowing at all times when the gun is operating to prevent melting or eroding the crucible.

2. For adequate water flow, ensure that the active crucible is properly centered in the top plate opening. Provision to check the orientation must be provided by either an electrical position indicator or visual inspection.

3. Check the crucible load to ensure that sufficient evaporant material is in the crucible. To avoid crucible damage, the Source should not be operated with less than half of the crucible volume filled. Refer to Figure 4.

4. Ensure that the shutter is a minimum of 4″ above the Source.

5. Ensure that the Source is securely bolted to the baseplate or fixture to which it is mounted.

6. Ensure that the mechanical drive for crucible indexing is properly mounted, and the direction of rotation is correct.

4.1.2 Electrical Inspection

1. Ensure that all leads have been installed in their correct positions. See Section 3.2.

2. Ensure that proper electrical shielding is in place.

3. Remove debris or loose parts that could cause shorting during pumpdown.

4. If the Source is to be operated at less than 10 kV, ensure that the proper shunt bar has been installed. Refer to Figure 2.

5. Check all external wiring to ensure proper insulation and isolation from any possible human contact.

WARNING

THIS EQUIPMENT IS OPERATING AT VOLTAGES WHICH COULD BE FATAL.

4.1.3 Turn-on

Consult the power supply manual before proceeding with the electrical turn-on.

4.2 NORMAL OPERATION

4.2.1 Pole Extensions

For proper adjustment of pole extensions, see Figure 1 which illustrates the effect of pole extensions on beam shape.

1. For subliming materials, such as chromium and SiO_2, the beam should normally be diffused.

2. For low temperature evaporants, such as aluminum, beam size and hence pole positions vary according to power and rate required. Refer to Figure 5 for typical rate/power characteristics with and without pole extensions.

3. For refractories, such as tungsten, molybdenum, and tantalum, it is usually desirable to operate with a well focused beam.

4.2.2 Operating Voltage

1. For dielectric materials, it is normally desirable to operate the power supply at low voltages, i.e. 4-6 kV.

2. For most other materials, it is desirable to operate the power supply at full voltage, i.e. 10 kV.

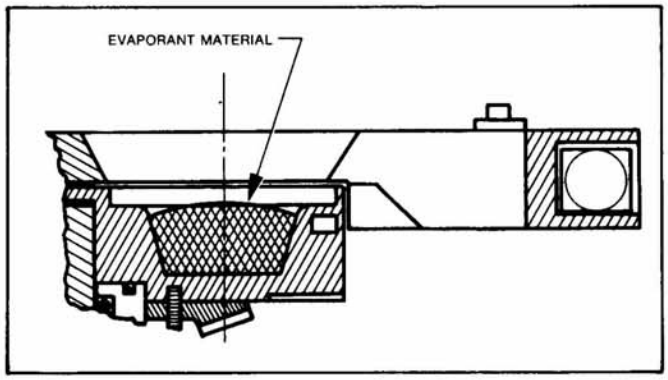

FIGURE 4
NORMAL POOL HEIGHT

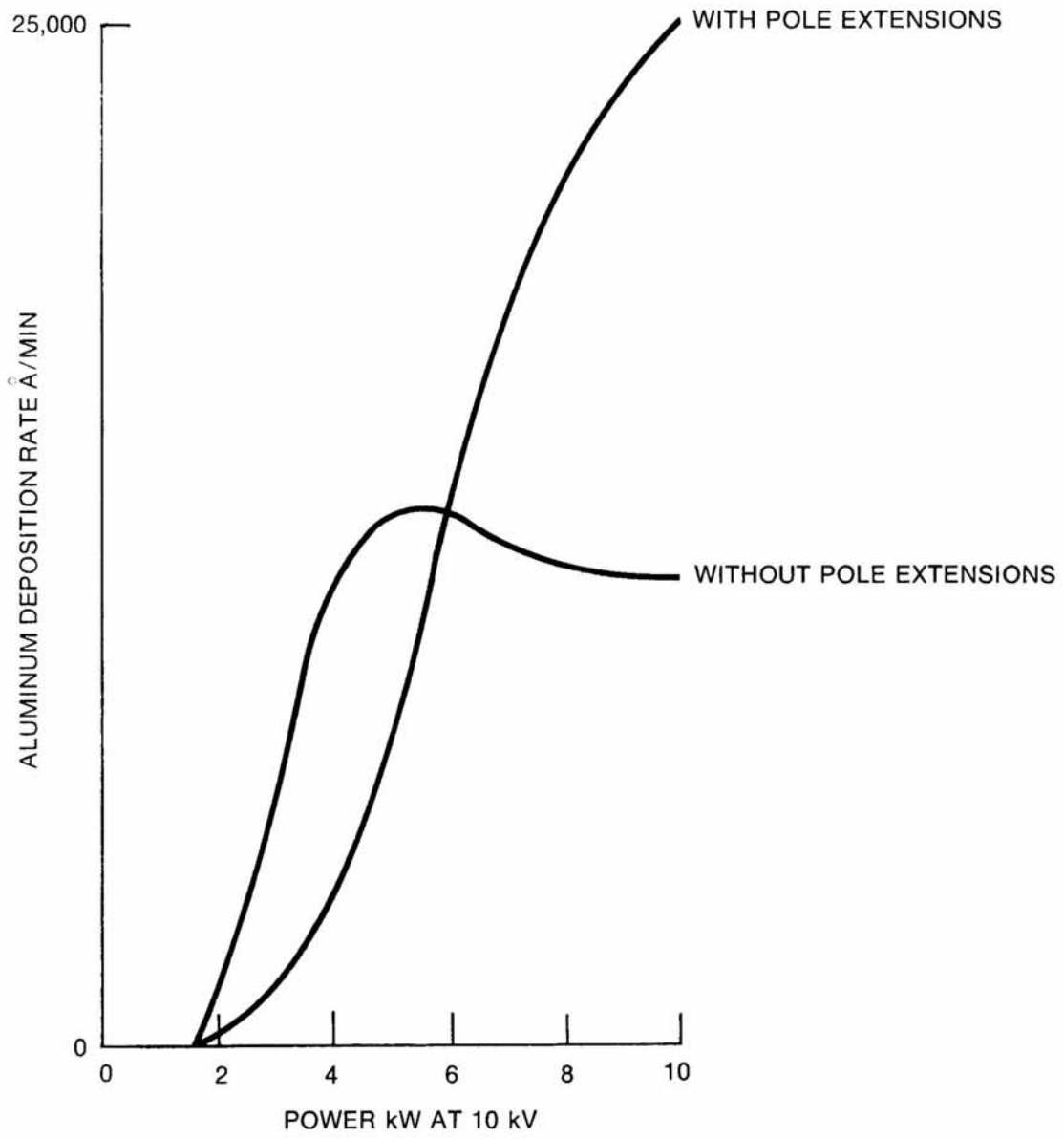

FIGURE 5
APPROXIMATE ALUMINUM DEPOSITION RATES AT 10″
WITH AND WITHOUT POLE EXTENSIONS

SECTION 5

MAINTENANCE

5.1 PERIODIC MAINTENANCE

5.1.1 Insulators and Feedthroughs

1. Inspect the insulators and feedthroughs to ensure that they are not coated or cracked. The two high voltage insulators of the emitter assembly may be inspected visually; it is not necessary to disassemble the Source.

2. If an insulator and/or feedthrough is cracked, replace it.

3. If an insulator and/or feedthrough is fouled, it may be cleaned. The preferred method for cleaning is by air blasting with glass-bead honing powder. Alternate methods are 1) wet scrubbing with an abrasive cleaner or 2) chemical cleaning.

5.1.2 Filament

Inspect the filament. If the filament is sagging, warped, or ion eroded, as evidenced by a noticeably reduced cross sectional area at any point, it should be considered near failure and should be replaced. Normal filament life is about 150 hours, but high pressure operation drastically reduces filament life.

To replace and adjust the filament:

1. Ensure that the MAIN POWER CIRCUIT BREAKER on the power supply is OFF and that the grounding hooks are in place.

2. Disconnect the filament leads from either the high voltage feedthroughs or the filament buss bars. Refer to Figure 2.

3. Remove the emitter assembly from the Source assembly by loosening the thumbscrews located on both sides of the Source (2 full turns) and pulling the emitter assembly squarely out. Refer to Figure 2.

4. Remove the two filament clamps by removing the two filament clamp screws. Refer to Figure 6.

5. Remove the filament. Make sure that any broken filament wire is removed from the filament clamps. Emery paper the "V" slot in the filament clamps to remove any accumulated oxide coating.

6. Insert a new filament in the filament cavity. Replace the filament clamps. Make sure that the filament legs are located in the "V" slots in the filament clamps, bottomed against the cathode blocks, and loosely clamped in place. Refer to Figure 7.

NOTE: The filament should not be handled by bare hands. Salt contaminants can shorten filament life.

7. Position the filament as shown in Figure 7 using the filament location gauge, and tighten the two filament clamp screws. Be sure that the filament is parallel to the beam former in both planes.

8. Electrically check to ensure filament continuity between the cathode blocks.

9. Inspect the high voltage spacing insulators for excessive coating. Clean or replace if necessary. Refer to Section 5.1.1 for the recommended cleaning procedure.

10. Insert the emitter assembly into the Source. Before tightening the thumbscrews, ensure that the emitter assembly is positioned tightly against the mounting blocks. Visually check this position by ensuring that the anode plate is flush with the beam passage opening in the crucible.

11. Reconnect the filament leads.

5.1.3 Crucible

Since evaporant buildup may cause thermal shorts, the crucible must be cleaned periodically. How often this must be done depends on the operation. A metal deposit buildup on the top plate will also occur and should be removed periodically. The preferred method for in-tank cleaning is to carefully scrape the particles and remove the residue with a vacuum cleaner. For a more thorough cleaning, remove the crucible and air blast with a glass bead honing powder. Care should be taken to prevent small flakes from falling into the emitter area as they can cause shorting problems.

5.2 CONTINUAL MAINTENANCE

5.2.1 Thread Lubrication

Use molybdenum disulfide on all threads each time a fastener is removed and reinserted. This will prevent seizure at the high temperatures involved. Use either 1) dry type or 2) spray or liquid with water, Freon, or another volatile solvent. Avoid an oil based type, as the oil will create an outgassing problem. AIRCO Temescal stocks a spray, *Rocol,* type DFSM, Part No. 8444-0002-0.

5.2.2 Drive Mechanism

Ensure that no particulate matter has been deposited on the drive mechanism and that the gear teeth show no abnormal signs of abrasion.

303-9392
BEAM FORMER

303-6721
LOCATING INSULATOR

204-0292
ANODE

303-9362
CATHODE BLOCK R.H.

303-9351
FILAMENT

1378-1200-0
WASHER, FLAT #6

1321-1255-0
SCREW, SOCKET HD. CAP
SST #6-32 NC-2Ax½" LG.
(2 PLACES)

1321-1252-0
SCREW, SOCKET HD. CAP
SST #6-32 NC-2Ax¼" LG.
(9 PLACES)

204-0332
MOUNTING BAR

303-3131
FLANGED INSULATOR
(4 PLACES)

204-0312
MOUNTING
BRACKET

303-9351
CATHODE BLOCK L.H.

418-4631
H.V. SPACING INSULATOR
(2 PLACES)

303-9382
FILAMENT CLAMP
(2 PLACES)

204-0302
INSULATOR SHIELD
(2 PLACES)

1321-1254-0
SCREW, SOCKET HD. CAP
SST #6-32 NC-2Ax⅜" LG.
(4 PLACES)

204-0343-0
FILAMENT BUSS
BAR-PAIR (LH./RH.)

204-0332
EMITTER
SUPPORT BAR

FIGURE 6
EMITTER ASSEMBLY, EXPLODED VIEW

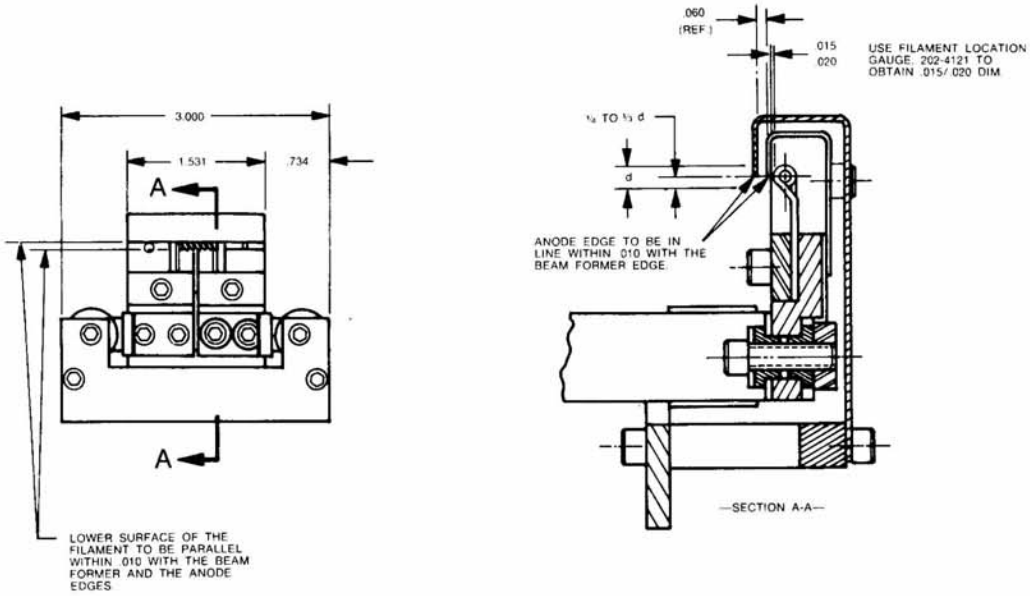

FIGURE 7
FILAMENT ALIGNMENT

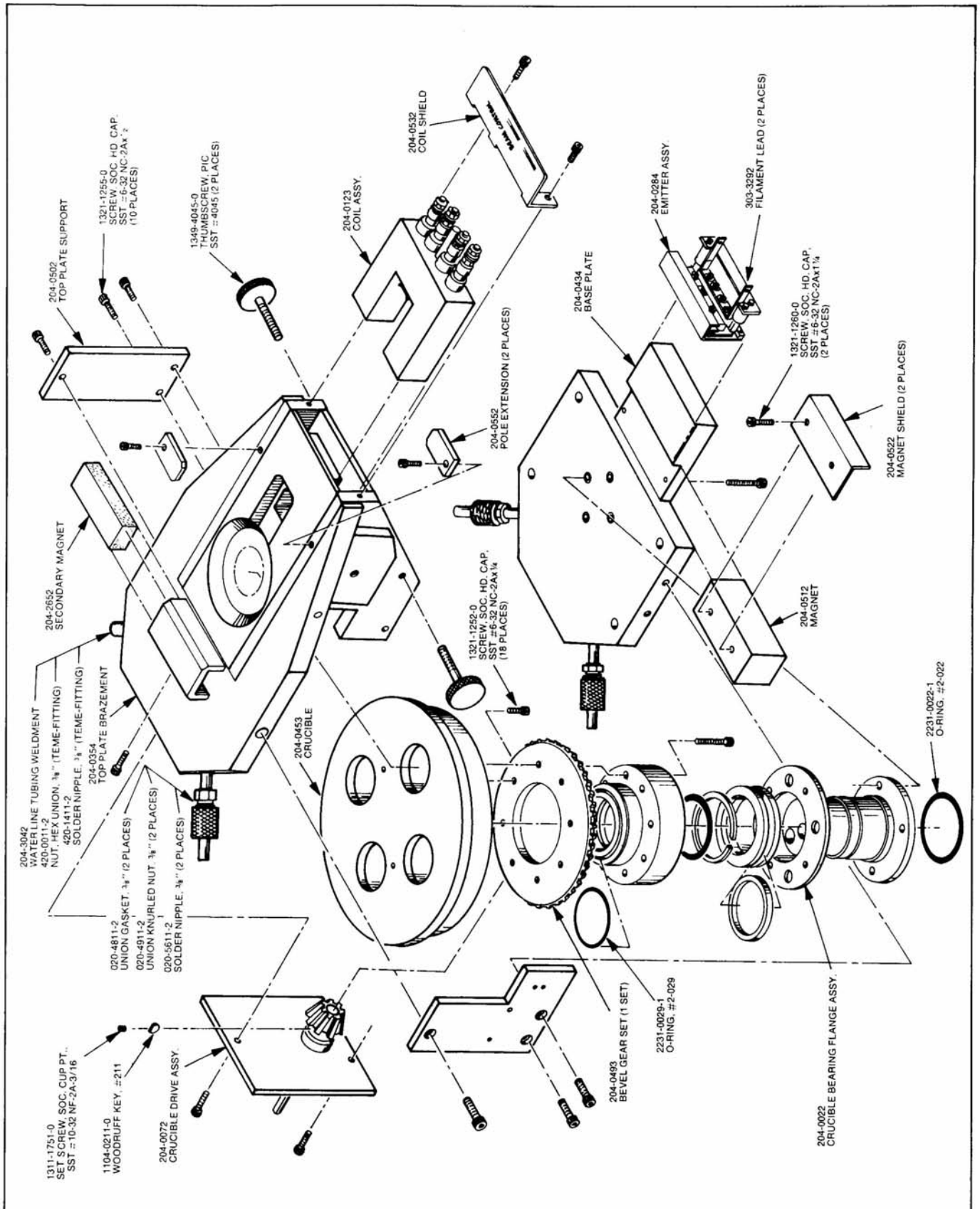

FIGURE 8
SOURCE ASSEMBLY, EXPLODED VIEW

5.3 TROUBLESHOOTING

SYMPTOM			PROBABLE CAUSE	CORRECTION
BEAM POWER*		FILAMENT		
VOLTAGE	CURRENT	CURRENT		
OK	0	0	1) Filament broken, loose, or high resistance due to oxide buildup on filament clamps. 2) Break in filament circuit or power supply.	1) Ensure that the filament is good and the filament clamp screw is clean and tight.** 2) Check filament circuit and power supply.
0	1	OK	High resistance ground in system or Source.	Check system for shorted emitter, filament leads, and/or feedthroughs.
Emission voltage and current kicks up and down, and visible arcing or heat at high voltage insulators.			High voltage insulators fouled or failed.	Examine insulators: a) If fouled by conductive deposits, clean by glass-bead hone. b) If physically damaged, replace.
OK	OK	High	Filament helix shorted.	Replace filament (cannot repair).**
OK Excessive longitudinal coil current.	OK	OK	1) Main field permanent magnet weak. 2) Partially shorted focus coil.	1) Charge or replace permanent magnet.** 2) Replace focus coil.**
OK Beam spot not centered in longitudinal direction.	OK	OK	Coil current improperly adjusted.	Adjust focus current.
OK Beam spot not centered in lateral direction or tails on one side of the spot.	OK	OK	1) Parts not in correct alignment. 2) Pole pieces or other parts damaged.	1) Ensure that all parts are tight and snug, and that the filament is correctly positioned and is not warped or sagging. 2) Repair or replace damaged parts.**
OK Melt wetting or eroding crucible.	OK	OK	1) Beam off center and/or focus too close to edge. 2) Insufficient water flow. 3) Emitter out of adjustment. Filament may be out of alignment.	1) Readjust the focus current so that the beam is centered in the crucible. 2) Ensure that the cooling water is flowing through the crucible at a minimum of 4 gal./min. 3) Ensure that the emitter is adjusted as shown in Figure 6.
OK A pressure burst on ion gauge when crucible is rotating.	OK	OK	Water leaking past water seal.	Replace and lubricate quad-ring.***
OK Crucible sticks or is difficult to rotate.	OK	OK	Lack of lubrication on water seal.	Replace and lubricate quad-ring.***

*Power supply nominal operating values are listed in the appropriate power supply instruction manual.

**Apply molybdenum disulfide to all threads whenever a fastener is removed and reinserted.

***Apply Dow Corning Vacuum Grease or its equivalent.

PART NUMBER	DESCRIPTION	MATERIAL
0303-9372-0	Cathode Block, R.H.	Moly
0303-9382-0	Filament Clamp	Moly
0303-9392-0	Beam Former	Tantalum
0418-4631-0	H.V. Spacing Insulator	Alumina
1321-1252-0	Screw, Soc. Hd., #6—32NC—2A x ¼″	SST
1321-1254-0	Screw, Soc. Hd., #6—32NC—2A x ⅜″	SST
1321-1255-0	Screw, Soc. Hd., #6—32NC—2A x ½″	SST
1378-1200-0	Washer, Flat #6	SST
0204-0354-0	Top Plate Brazement	Copper/304-SST
0204-0423-0	Top Plate Weldment	304-SST
0204-0434-0	Base Plate	304-SST
0204-0453-0	Crucible	Copper
0204-0493-0	Bevel Gear Set	SST
0204-0502-0	Top Plate Support	304-SST
0204-0512-0	Magnet	Alnico-5
0204-0522-0	Magnet Shield	304-SST
0204-0532-0	Coil Shield	304-SST
0204-0552-0	Pole Extension	416-SST
0204-2652-0	Secondary Magnet	Alnico-5
0204-2851-0	Spare Parts Kit	
0020-4811-2	(2) Union Gasket, ⅜″	Viton
0202-4121-0	(1) Filament Location Gauge	SST
0204-0292-0	(1) Anode	Tantalum
0303-3131-0	(4) Flanged Insulator	Alumina
0303-6721-0	(1) Locating Insulator	Alumina
0303-9351-0	(5) Filament (.030 dia. x 7½ turns)	Tungsten
0303-9392-0	(1) Beam Former	Tantalum
0418-4631-0	(2) H.V. Spacing Insulator	Alumina
1321-1252-0	(2) Screw, Soc. Hd. Cap, #6—32NC—2A x ¼″	SST
1321-1255-0	(2) Screw, Soc. Hd. Cap, #6—32NC—2A x ½″	SST
2108-0216-0	(1) Quad-Ring, #4-216	Buna-N
2231-0022-1	(1) O-Ring, #2-022 (V747-75)	Viton
2231-0029-1	(1) O-Ring, #2-029 (V747-75)	Viton
2231-0110-1	(1) O-Ring, #2-110 (V747-75)	Viton
6642-0002-0	(1) Shipping Box	Plastic
0303-3292-0	Filament Lead	Copper
1304-0211-0	Woodruff Key, #211	SST
1311-1751-0	Set Screw, Soc. Cup. PT., #10—32NF—2A x 3/16″	SST
1321-1252-0	Screw, Soc. Hd., #6—32NC—2A x ¼″	SST
1321-1255-0	Screw, Soc. Hd., #6—32NC—2A x ½″	SST
1321-1260-0	Screw, Soc. Hd., #6—32NC—2A x 1¼″	SST
1349-4045-0	Thumbscrew, #10-32 x ⅝″, PIC #4045	SST
2231-0022-1	O-Ring, #2-022	Viton
2231-0029-1	O-Ring, #2-029	Viton
2231-0110-1	O-Ring, #2-110	Viton
6990-0015-0	Bondhus Ball Driver, #7/64 (Wrench)	

SECTION 6

PARTS LIST

PART NUMBER	DESCRIPTION	MATERIAL
0101-9311-0	Instruction Manual	
0204-0014-0	STIH-270-2	
0020-4811-2	Union Gasket, 3/8"	Viton
0020-4911-2	Union Knurled Nut, 3/8"	304-SST
0020-5611-2	Solder Nipple, 3/8"	304-SST
0204-0022-0	Crucible Bearing Flange Assembly	
0204-0032-0	Pivot Shaft	304-SST
0204-0042-0	Crucible Bearing Flange	304-SST
0204-0052-0	Crucible Bearing Plate	304-SST
0204-0062-0	Bearing Spacer	304-SST
1321-1252-0	Screw, Soc. Hd., #6—32NC—2A x 1/4"	SST
1384-1106-0	Retaining Ring, Truarc #5108-1064	SST
2108-0216-0	Quad Ring, #4216 (1.125 I.D. x 1.375 O.D. x 125 W)	Buna-N
9120-1724-0	Bearing, MPB #TCNF 17-24	SST
0204-0072-0	Crucible Drive Assembly	
0204-0092-0	Crucible Drive Support	304-SST
0204-0102-0	Drive Shaft Bearing Mount	304-SST
0204-0112-0	Drive Shaft	304-SST
1384-0062-8	Retaining Ring, #5008-62H	SST
1384-1032-5	Retaining Ring, #5103-25H	SST
9018-0019-0	Shaft Spacer, #B8-15	SST
9120-1270-0	Bearing, #SS-R-4	SST
0204-0123-0	Coil Assembly	304-SST/Alumina
0204-0193-0	Crucible Index Assembly, without Micro-Switch	
0204-0193-1	Crucible Index Assembly, with Micro-Switch (for STIH-270-1 only)	
0204-0202-0	Crucible Index Support Weldment	304-SST
0204-0232-0	Index Bearing Flanged Bushing	304-SST
0204-0242-0	Pivot Arm Flanged Bushing	304-SST
0204-0252-0	Index Pivot Arm Weldment	304-SST
1306-1053-0	Spring Pin, 1/16 dia. x 5/16	SST
1321-1251-0	Screw, Soc. Hd., #6—32NC—2A x 3/16"	SST
1321-1255-0	Screw, Soc. Hd., #6—32NC—2A x 1/2"	SST
1378-1200-0	Washer, Flat, #6	SST
6990-0005-0	Switch, HSI #61151	SST
6990-0006-0	Switch, Actuator, HSI #82149	SST
9120-1270-0	Bearing, New Departure #SS-R-4	SST
9551-0045-0	Spring, Compression, Assoc. Spring Corp. #C300-038-0810S	SST
0204-0284-0	Emitter Assembly	
0204-0292-0	Anode	Tantalum
0204-0302-0	Insulator Shield	304-SST
0204-0312-0	Mounting Bracket	304-SST
0204-0322-0	Mounting Bar	304-SST
0204-0332-0	Emitter Support Bar	304-SST
0204-0343-1	Filament Buss Bar, L.H.	Tantalum
0204-0343-2	Filament Buss Bar, R.H.	Tantalum
0303-3131-0	Flanged Insulator	Alumina
0303-6721-0	Locating Insulator	Alumina
0303-9351-0	Filament (.030 dia. x 7½ turns)	Tungsten
0303-9362-0	Cathode Block, L.H.	Moly